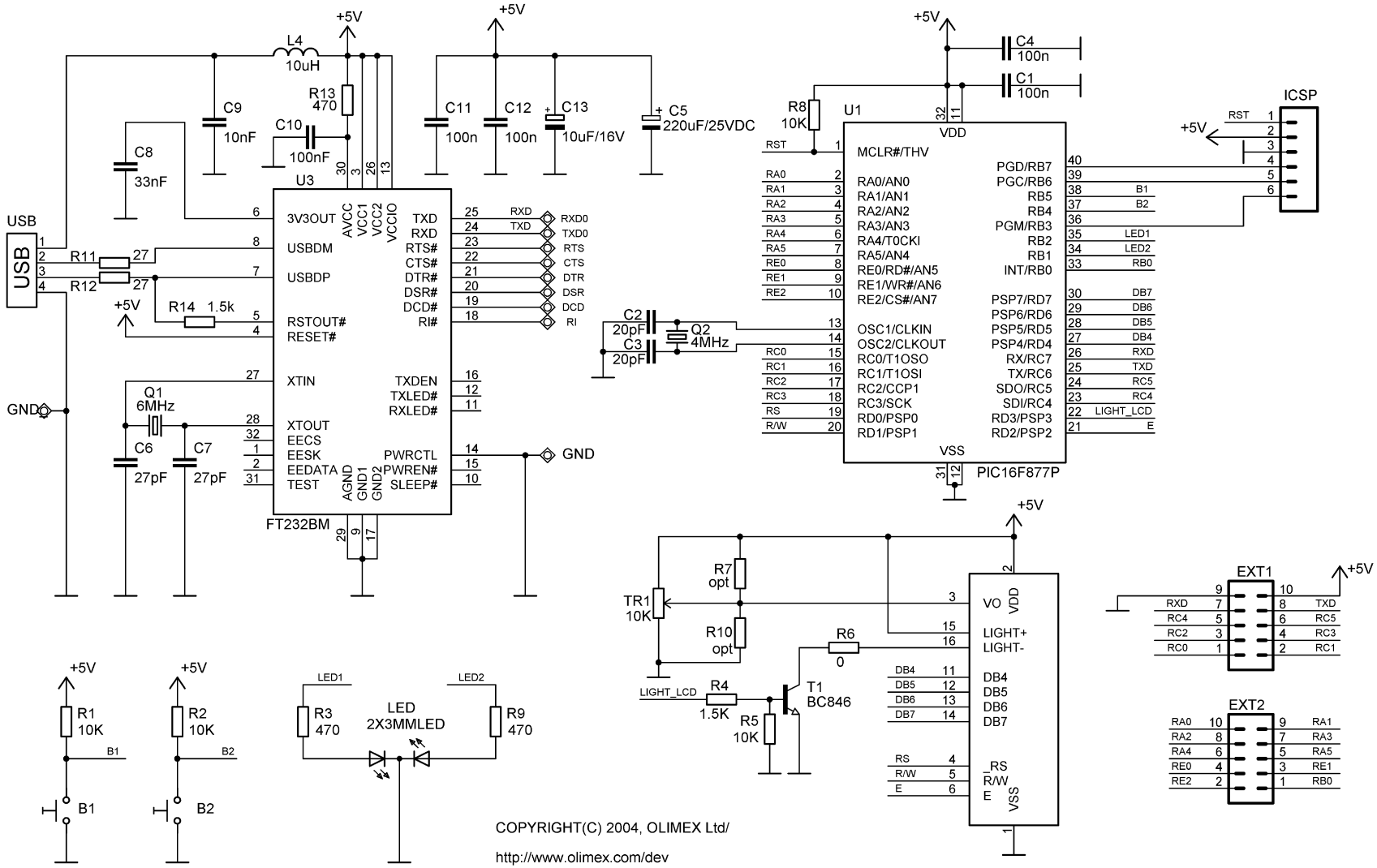


COPYRIGHT(C) 2004, OLIMEX Ltd/

http://www.olimex.com/dev