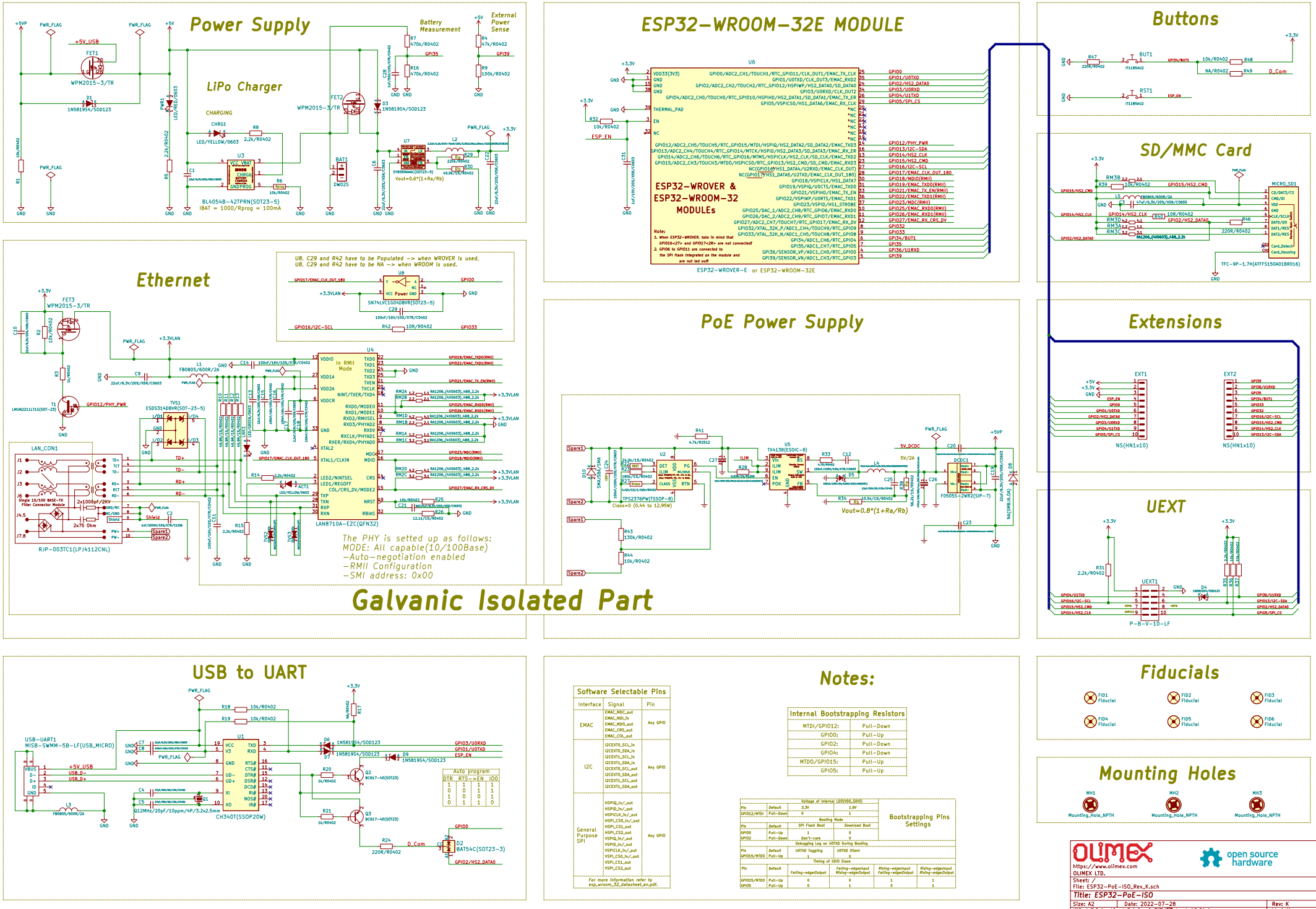
Power Supply
LiPo Charger
Battery Measurement
External Power Sense
ESP32-WROOM-32E MODULE
ESP32-WROVER & ESP32-WROOM-32 MODULEs
Buttons
SD/MMC Card
Ethernet
PoE Power Supply
Extensions
UEXT
Galvanic Isolated Part
USB to UART
Notes:
Fiducials
Mounting Holes
Software Selectable Pins
Internal Bootstrapping Resistors
Bootstrapping Pins Settings
OLIMEX
open source hardware
Title: ESP32-PoE-ISO